YQ50 AEROX WIRING DIAGRAM

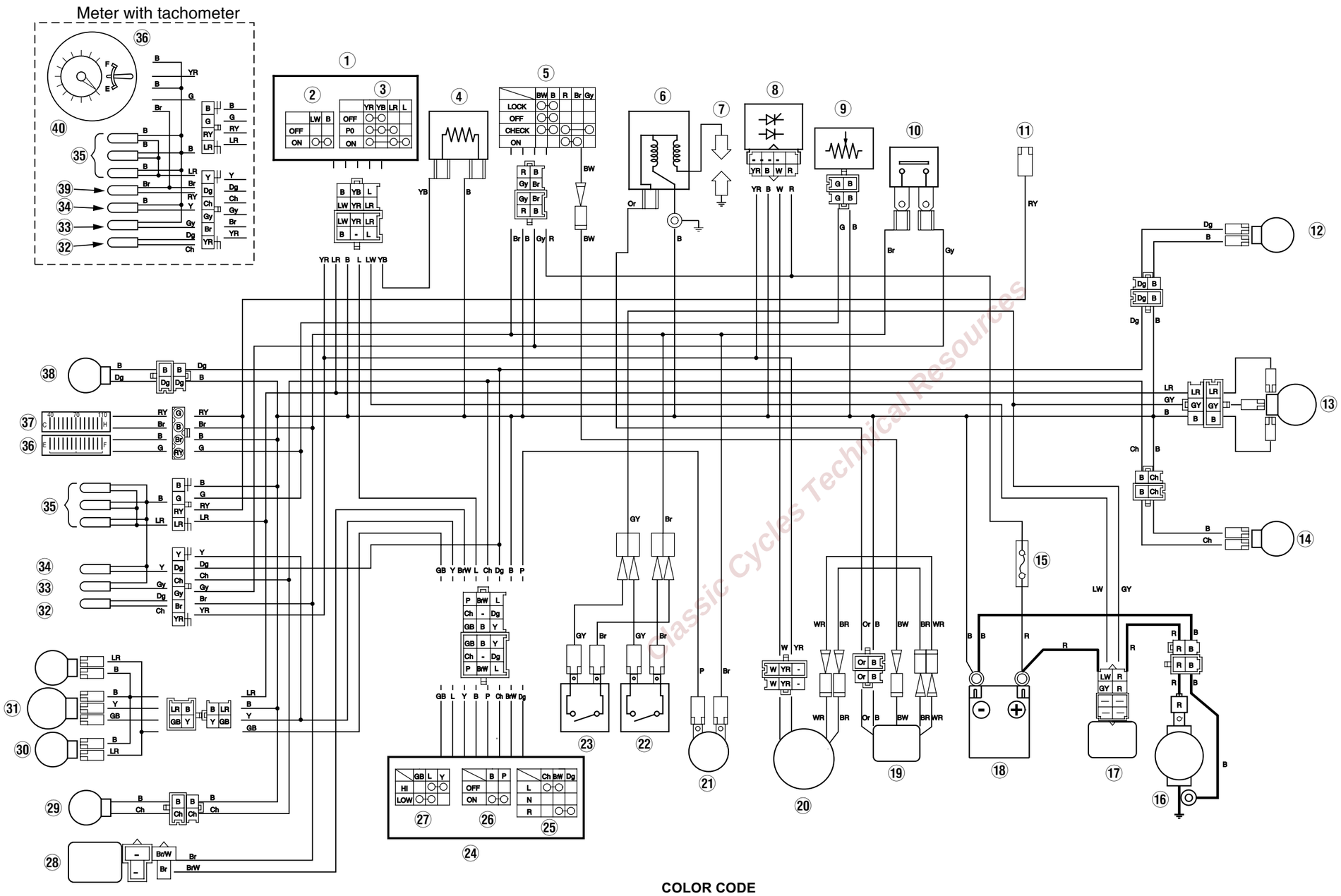

Classic Cycles Technical Resources

COLOR CODE

B	Black	O	Orange	B/R	Black/Red	Br/Y	Brown/Yellow
L	Blue	Br	Brown	B/W	Black/White	Br/W	Brown/White
G	Green	Gy	Grey	L/W	Blue/White	W/R	White/Red
Y	Yellow	Ch	Chocolate	G/Y	Green/Yellow	R/Y	Red/Yellow
R	Red	Dg	Dark green	Y/B	Yellow/Black		
P	Pink	W	White	Y/R	Yellow/Red		

1. Handlebar switch (right)
2. "START" switch
3. "LIGHT" switch
4. Resistor
5. Main switch
6. Ignition coil
7. Spark plug
8. Rectifier / regulator
9. Fuel lever sender
10. Oil lever switch
11. Water temp. sender
12. Rear flasher (right)
13. Tail / brake light
14. Rear flasher (left)
15. Fuse
16. Starter motor
17. Starter relay
18. Battery
19. CDI unit
20. CDI magneto
21. Horn
22. Rear brake switch
23. Front brake switch (left)
25. "TURN" switch
26. "HORN" switch
27. " HI / LO" switch
28. Flasher relay
29. Front flasher (left)
30. Auxiliary light
31. Head light
32. "TURN" indicator light
33. "OIL" warning light
34. "HIGH BEAM"indicator light
35. Meter light
36. Fuel meter
37. Water temperature gauge
38. Front flasher light (right)
39. Water temp. warning light
40. Tachometer

YAMAHA MOTORCYCLE PARTS & ACCESSORIES

Click on links below

Yamaha YQ50 Aerox Original Equipment Parts & Complete Online Diagrams

Yamaha YQ50 Aerox Model History & Technical Specifications

Motorcycle Helmet Closeout Sale

Yamaha Motorcycle Parts & Accessories

Yamaha Dirt Bike Parts & Accessories

Save On All Motorcycle Tires

Motorcycle Gear Closeout Sale

High Visibility Motorcycle Gear

Cycle Gear – Free Shipping

Free Shipping On All Motorcycles

Discount Auto Parts – Free Shipping